Clamping device

(two of these needed to make the complete device)

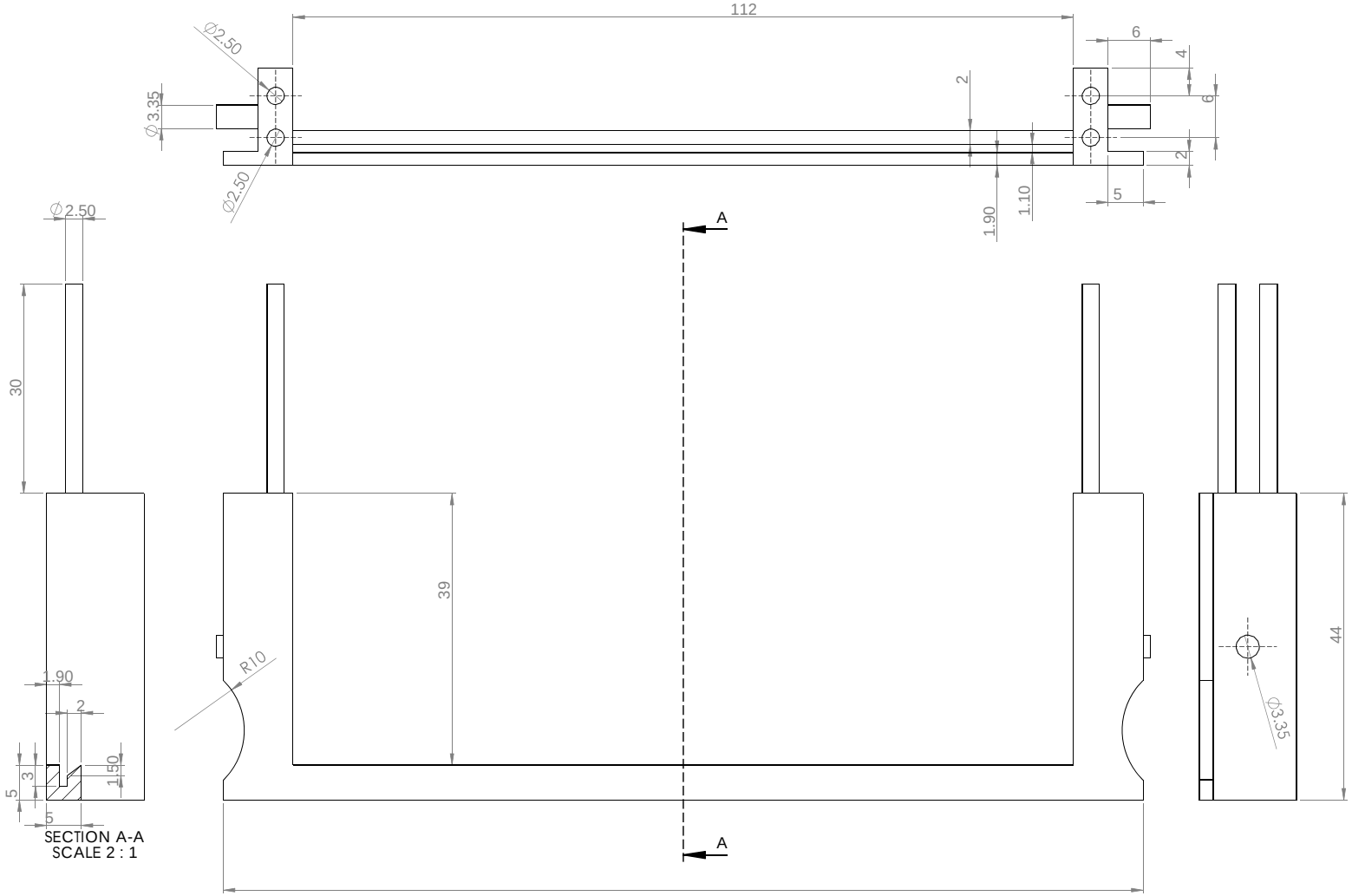

Left finger

(Right finger is a mirror image of this)

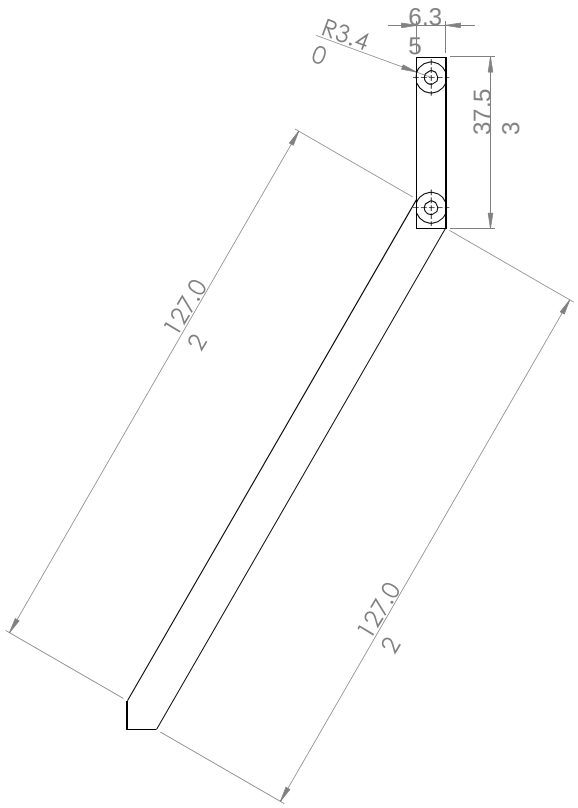

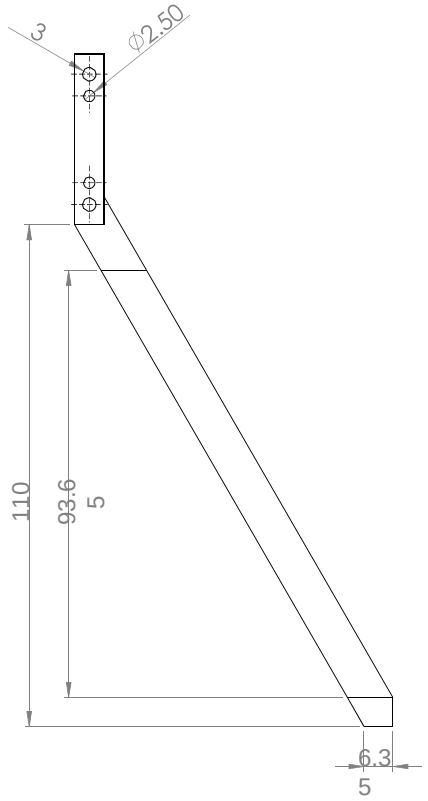

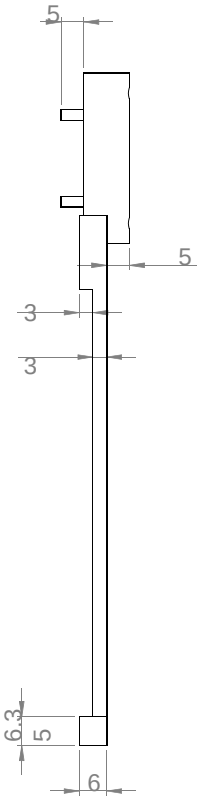

UNLESS OTHERWISE SPECIFIED: DIMENSIONS ARE IN MILLIMETERS SURFACE FINISH: TOLERANCES:	FINISH :	DEBURR AND BREAK SHARP EDGES	DO NOT SCALE DRAWING / REVISION
LINEAR: ANGULAR:	NAME / SIGNATURE / DATE		TITLE :
DRAWN			
CHKD MF			
APPVD Q.A		MATERIAL:	DWG NO. A3
		WEIGHT:	SCALE:1:1 / SHEET 1 OF 1

Plate-holder

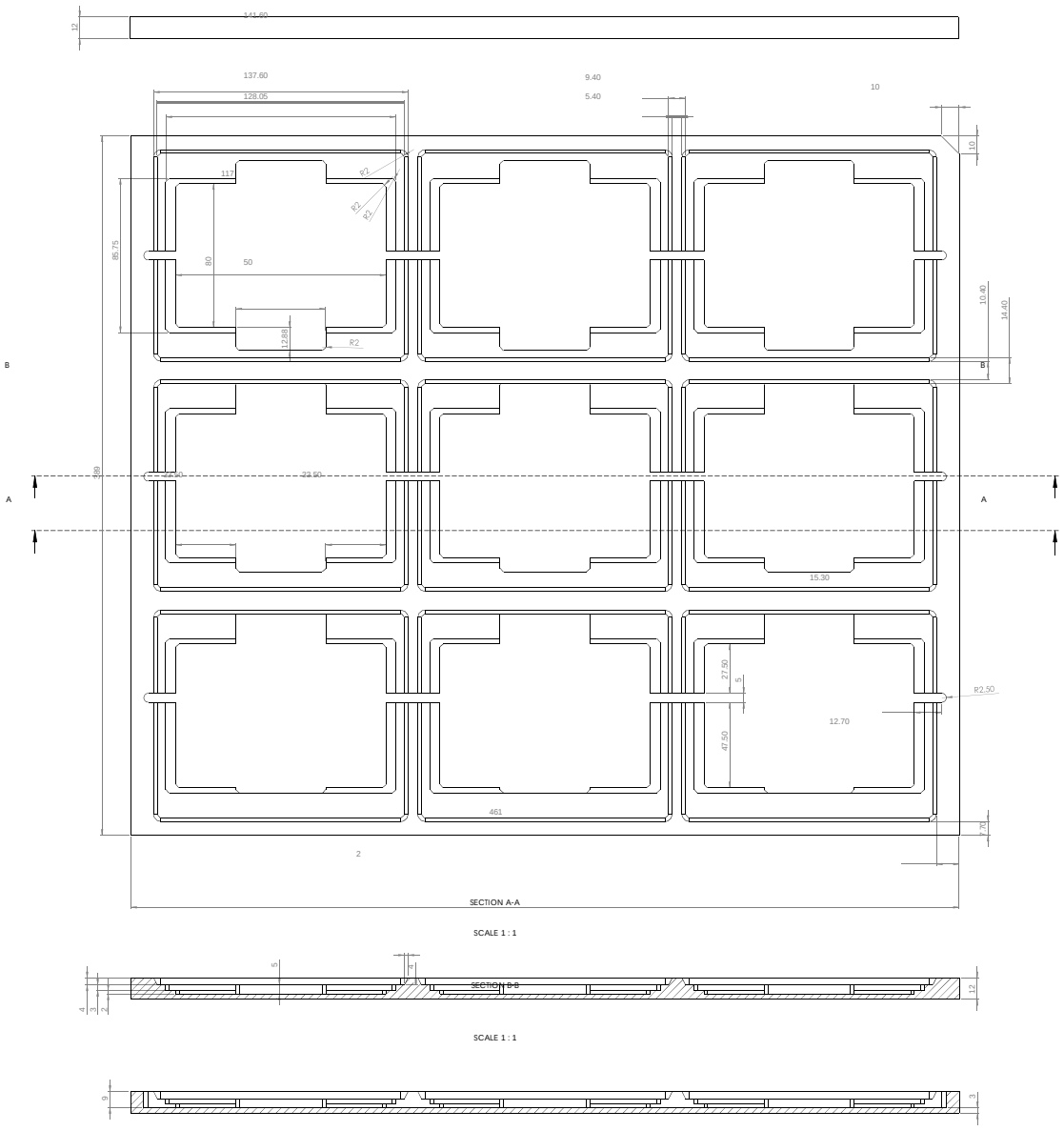

late-holder